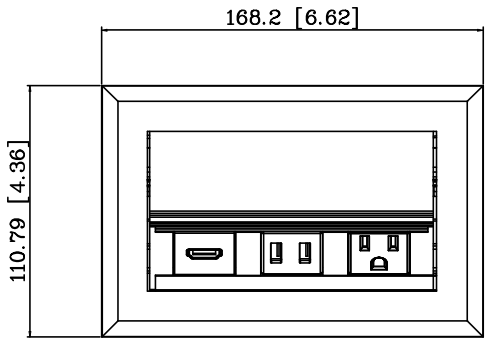

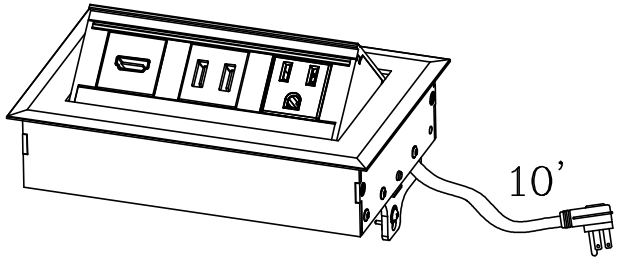

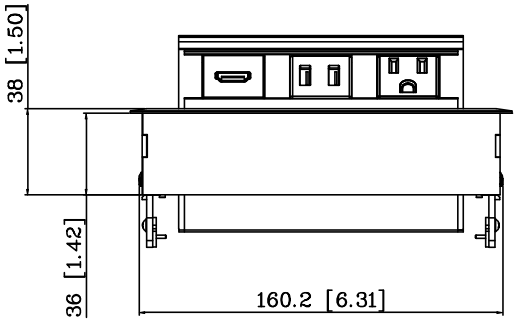

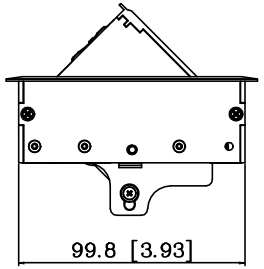

Specifications:

- Aluminum housing
- 1 Grounded AC outlet,125V 15A rating
- 5V 4.2A USB module with 2ports
- 1 HDMI Coupler
- 10 ft SJT 14AWG*3C power cord

REV	DATE	DRAWN	APPROVED	DESCRIPTION

MOD POWER & LIGHTING SOLUTIONS
www.MOD-PLS.com

TOLERANCE (mm [INCH])						
[mm]		[INCH]		DRAWN	YGY	DATE	Apr. 6th 2023
X ±2.5		X.X ±0.1		CHECKED	JBX	DATE	Apr. 6th 2023
X.X ±0.8		X.XX ±0.03		APPROVED		DATE	
X.XX ±0.25		X.XXX ±0.010		PN	DOCK701-10010X-XX-12S		
SCALE	VIEW	UNIT	SHEET	DRAWING#			REV
1:1		mm[INCH]	1 OF 1	C-DOCK701100122081901			A