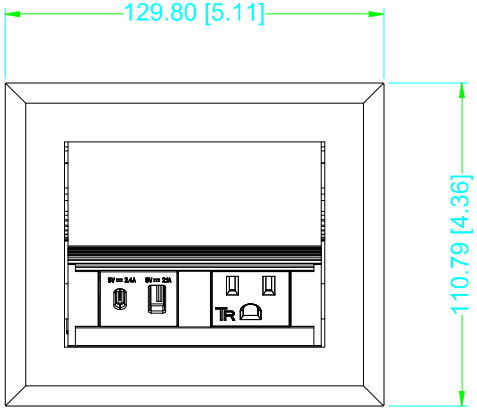

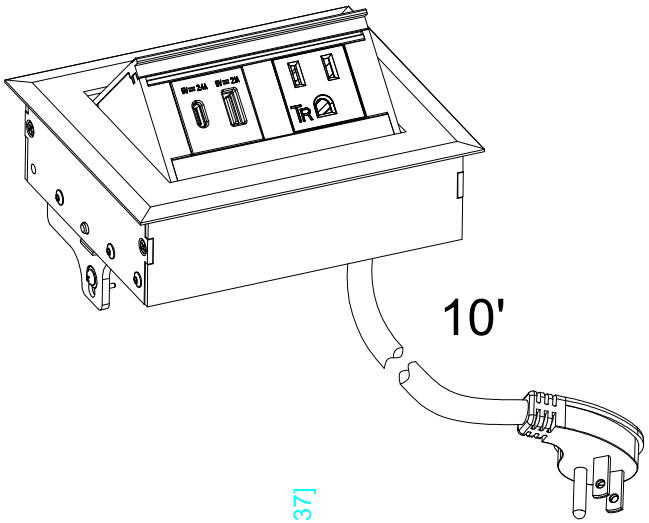

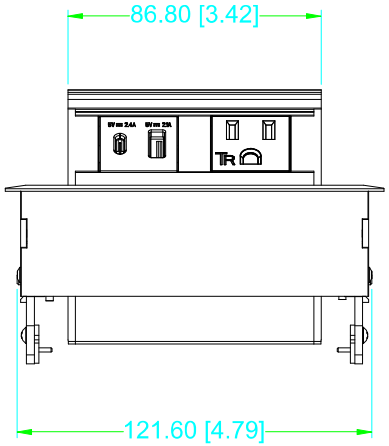

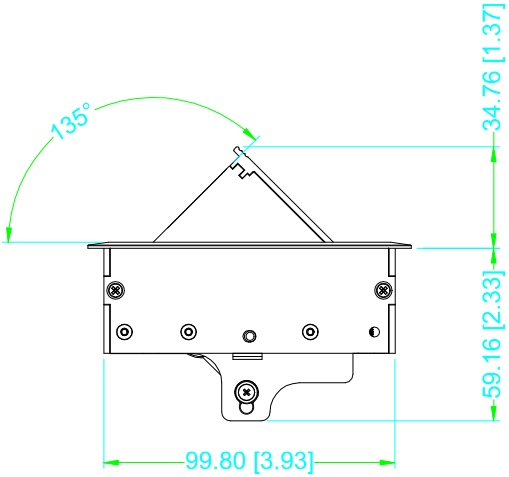

Specifications:

- Aluminum housing
- 1 Tamper Resistant outlet
- 10' 14AWG*3C power cord
- 5V DC 4.5A USB
  changer with 2 charging ports
- Rating:125V 60Hz 15A

REV	DATE	DRAWN	APPROVED	DESCRIPTION

MOD
POWER & LIGHTING SOLUTIONS
www.MOD-PLS.com

TOLERANCE (mm [INCH])							
[mm] X. ±2.5 X.X ±0.8 X.XX ±0.25		[INCH] X.X ±0.1 X.XX ±0.03 X.XXX ±0.010		DRAWN	YGY	DATE	Apr.6th 2023
				CHECKED		DATE	Apr.6th 2023
				APPROVED		DATE	
				PN	DOCK701-L0000X-XX-12S		
SCALE	VIEW	UNIT	SHEET	DRAWING#			REV
1:1		mm[INCH]	1 OF 1	C-DOCK701L0000X220407001			A