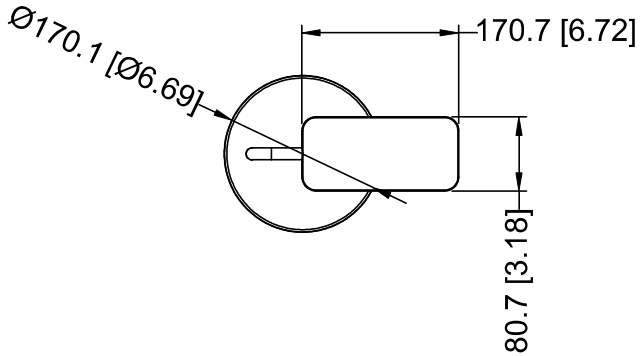

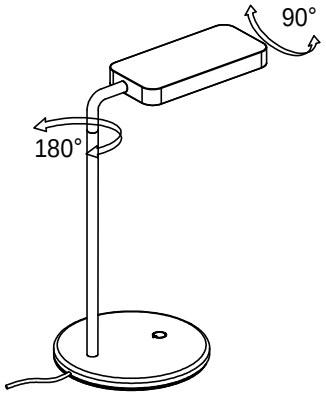

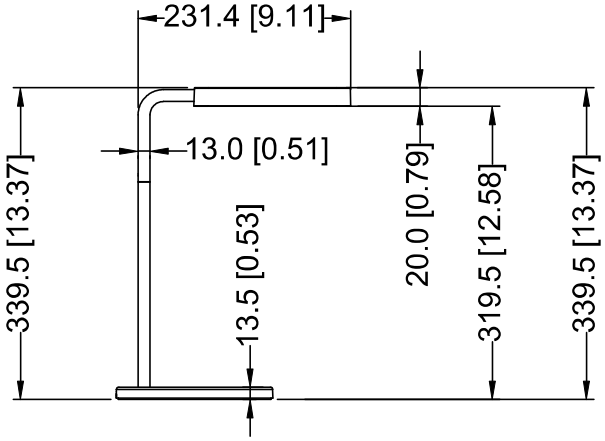

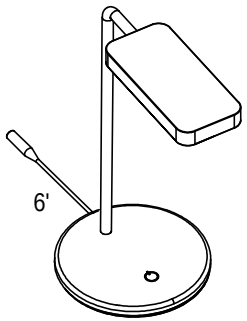

SPECIFICATIONS

- Color Temperature: 6,500K
- Lumen output: 530 lumen max.
- ON/OFF（short press）

-Five-stage-Dimming(Long-press)

- Glare, flicker, shadow, and UV free
- Adjustable arm for maximized light coverage
- Power input: AC 100-240V power adapter with DC 24V 0.3 A output
- Shut down after 10 hours of inactivity

-Standby memory without power outage

REV	DATE	DRAWN	APPROVED	DESCRIPTION

MOD® POWER & LIGHTING SOLUTIONS
www.MOD-PLS.com

TOLERANCE (mm [INCH])						
[mm] X. ±2.5, X.X ±0.8, X.XX ±0.25	[INCH] X.X ±0.1, X.XX ±0.03, X.XXX ±0.010	DRAWN	ZDL	DATE	Sep.9th 2025	
		CHECKED	JBX	DATE	Sep.9th 2025	
		APPROVED		DATE		
		PN	TL-502-65			

SCALE	VIEW	UNIT	SHEET	DRAWING#	REV
1:1		mm[INCH]	1 OF 1	C-TL502250909001	Qa