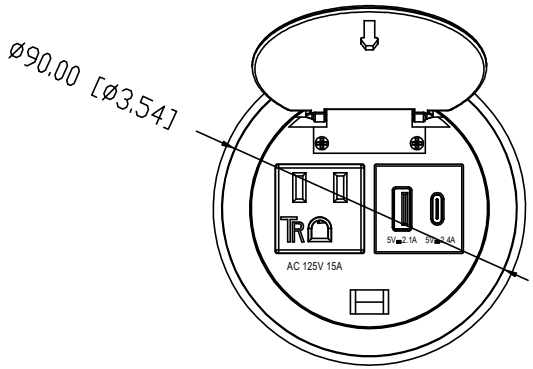

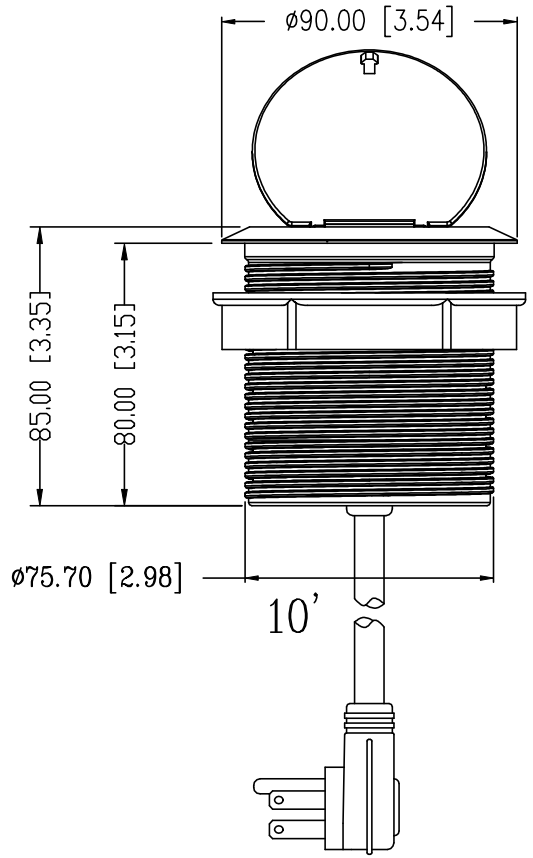

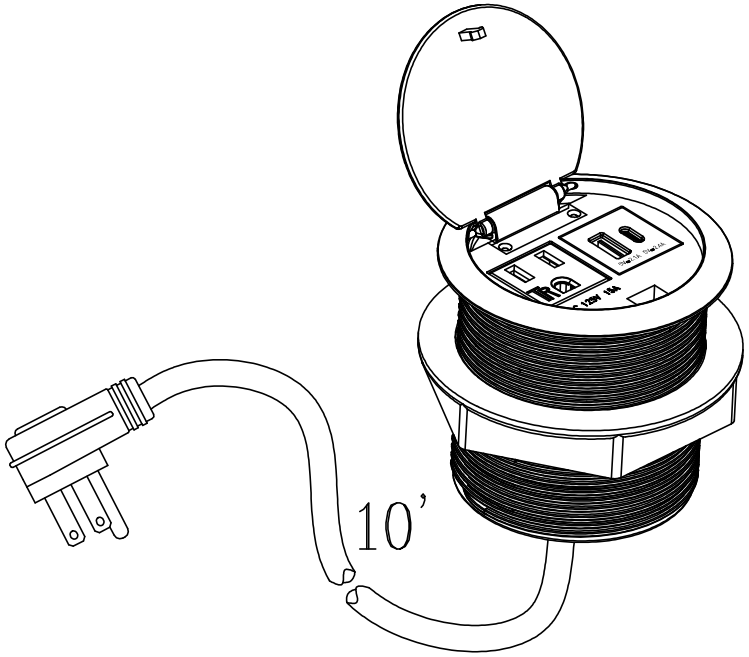

Specifications:

- 1 Tamper-Resistant AC receptacle
- Rating:125V 60Hz 15A
- DC 5V 4.5A(1 USB_A+1 USB_C) charging power
- 1000 joules surge protection
- 10ft SJT 14 AWG*3C power cord
- Bore 3" hole for installation

REV	DATE	DRAWN	APPROVED	DESCRIPTION

National Lighting©
www.nationallighting.com

TOLERANCE (mm [INCH])							
[mm]		[INCH]		DRAWN	YGY	DATE	Dec.17th 2021
X. ±2.5		X.X ±0.1		CHECKED	JBX	DATE	Dec.17th 2021
X.X ±0.8		X.XX ±0.03		APPROVED		DATE	
X.XX ±0.25		X.XXX ±0.010		PN	DOCK-280-15-P-TR		
SCALE	VIEW	UNIT	SHEET	DRAWING#			REV
1:1		mm[INCH]	1 OF 1	C-DOCK28020211216001			A