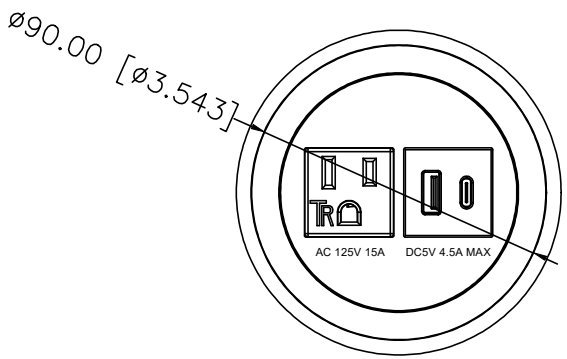

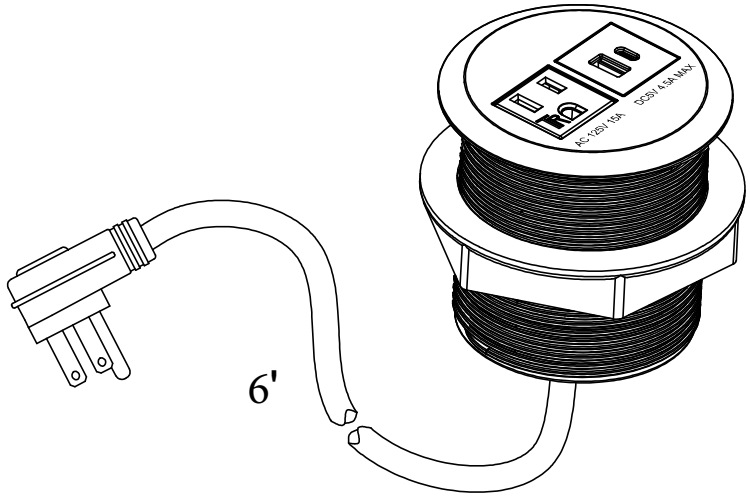

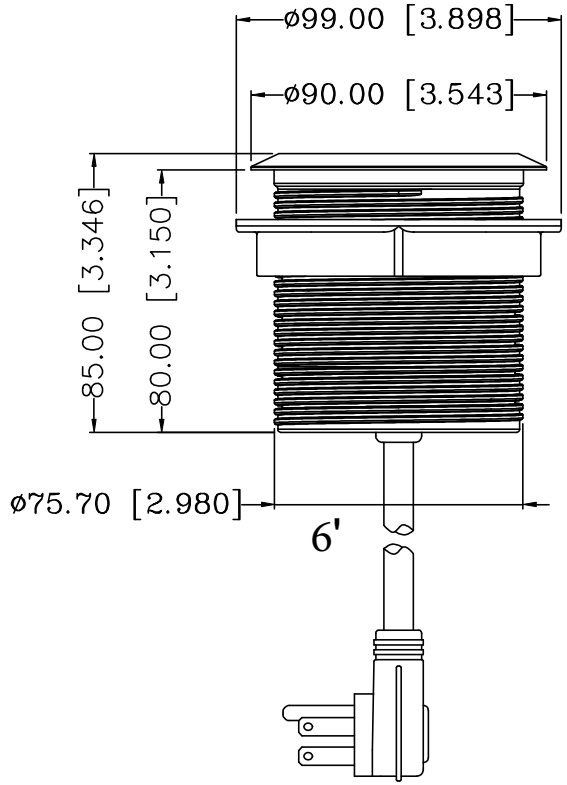

Specifications:

- (1) Tamper-Resistant AC receptacle
- DC 5V 4.5A (1 USB-A + 1 USB-C) charging power
- 6ft SJT 14 AWG*3C power cord
- Rating 125V 60 HZ 15A
- Bore 3" hole for installation

REV	DATE	DRAWN	APPROVED	DESCRIPTION

National Lighting©
www.nationallighting.com

TOLERANCE (mm [INCH])

[mm]		[INCH]	
X.	±2.5	X.X	±0.1
X.X	±0.8	X.XX	±0.03
X.XX	±0.25	X.XXX	±0.010

DRAWN	ZQX	DATE	Dec.16th 2021
CHECKED	JBX	DATE	Dec.16th 2021
APPROVED		DATE	
PN	DOCK-281-15-X-TR		

SCALE	VIEW	UNIT	SHEET	DRAWING#	REV
1:1		mm[INCH]	1 OF 1	C-DOCK28120211216001	A