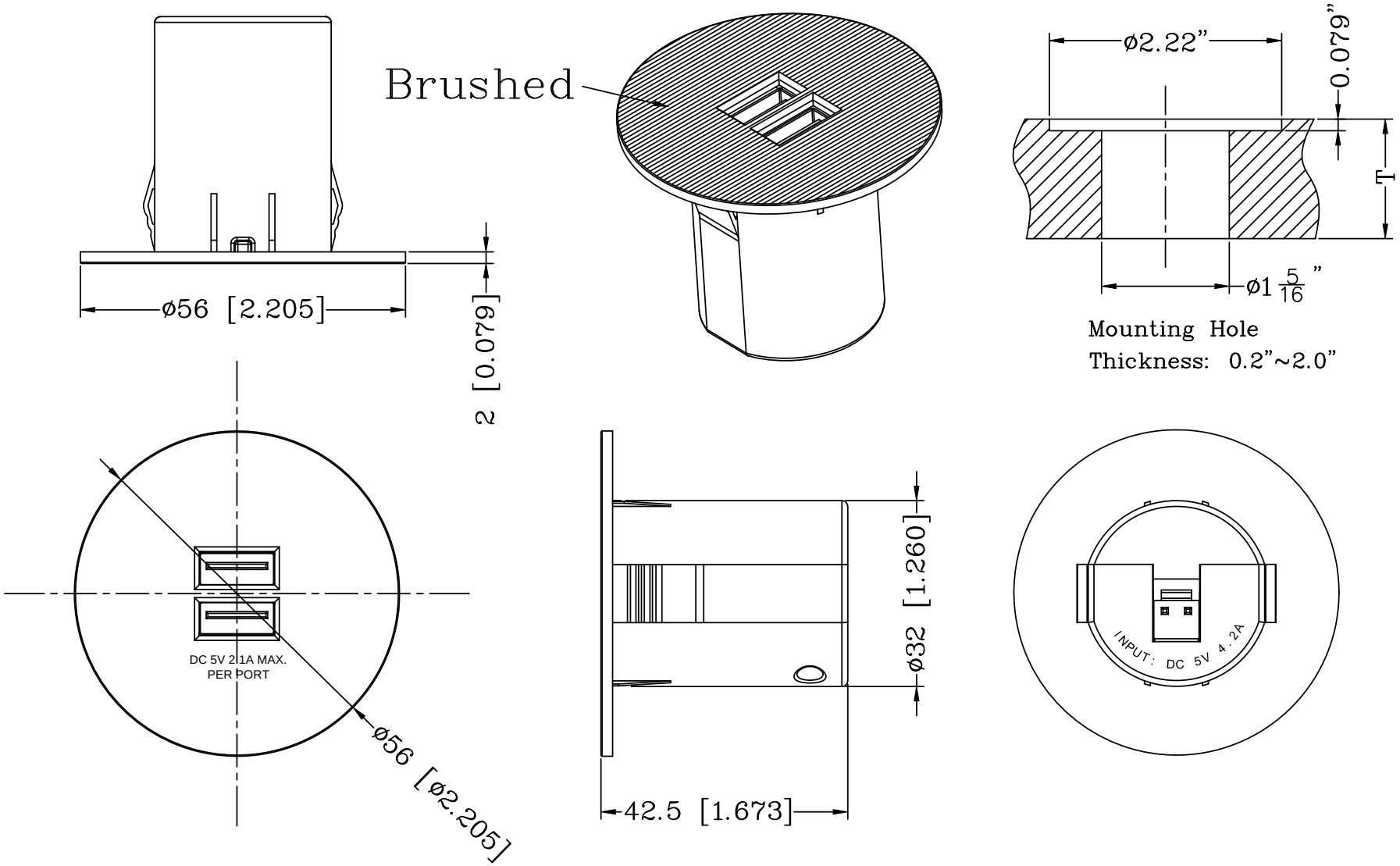

Input: DC 5V 4.2A

Output: DC 5V 2.1A(x2)

REV	DATE	DRAWN	APPROVED	DESCRIPTION

National Lighting©

www.nationallighting.net

TOLERANCE (mm [INCH])							
[mm] X ±2.5, X.X ±0.8, X.XX ±0.25		[INCH] X.X ±0.1, X.XX ±0.03, X.XXX ±0.010		DRAWN	MML	DATE	Mar.19th 2017
				CHECKED	JBX	DATE	Mar.27th 2017
				APPROVED		DATE	
				PN	DOCK140-FC-B		
SCALE	VIEW	UNIT	SHEET	DRAWING#			REV
1:2		mm[INCH]	1 OF 1	C-DK140-01			B